CITY OF ELMHURST

209 NORTH YORK STREET
ELMHURST, ILLINOIS 60126-2759
(630) 530-3020
www.elmhurst.org
Community Development – 630-530-3030
Fax: 630-530-3127

Permit # _____

Demolition Permit Application

Address of job: _____ Date: _____

Demolition of: ☐ Single Family ☐ Multi Family ☐ Commercial ☐ Garage

Owner name: _____
Address: _____ Phone: _____

General Contractor: _____ Contact Person: _____
Address: _____ Phone: _____

Demo/Excavator: _____ Contact Person: _____
Address: _____ Phone: _____

Disconnect Plumber: _____ Contact Person: _____
Address: _____ Phone: _____

The following is a checklist of requirements to be completed BEFORE a Demolition Permit can be issued:

☐ 1. Evidence of current Contractor Bond, Registration and Trade License.
☐ 2. Permit fee $1,798.00 and $1,000 refundable deposit.
☐ 3. DuPage County Health Department Site Evaluation.
☐ 4. Sewer and Water Disconnect Inspection.
☐ 5. City Right-of-Way Inspection.
☐ 6. Snow Fence Inspection.
☐ 7. Contact Water Billing Department:
   a. Water shut off at B-box
   b. Final meter reading
   c. Water meter removal
☐ 8. Proof of gas disconnection from Nicor.
☐ 9. Proof of electric disconnection from ComEd.
☐ 10. Proof of 10-day notice to IEPA (*Commercial Buildings only*)

☐ **11. Building Permit Approved? Permit #_____ Date_____**

Contact JULIE, Inc. at 1-800-892-0123 or *811 to locate ALL utilities PRIOR to any construction, including snow fence installation.

Call Community Development at 630-530-3030 24 hours before demo to schedule a dust control inspection. Failure to schedule this inspection may result in citations being issued.

Owner/Contractor Signature: _____ Phone: _____

CITY OF ELMHURST

209 NORTH YORK STREET
ELMHURST, ILLINOIS 60126-2759
(630) 530-3020
www.elmhurst.org
Community Development – 630-530-3030
Fax: 630-530-3127

Contractor Checklist for Demolition Permit

Address of job: _____ Date: _____

Contact J.U.L.I.E. Inc. (800-892-0123 or *811) to locate ALL utilities PRIOR to any demolition, including Snow Fence Installation.

The following is a checklist of requirements to be completed BEFORE a Demolition Permit can be issued:

_____ 1. Evidence of current Contractor Bond, Registration and Trade License.

_____ 2. Permit fee $1,798.00 and $1,000 refundable deposit.

_____ 3. DuPage County Health Department Site Evaluation.

_____ 4. Sewer and Water Disconnect Inspection.

_____ 5. City Right-of-Way Inspection.

_____ 6. Snow Fence Inspection.

_____ 7. Contact Water Billing Department:

_____ a. Water shut off at B-box

_____ b. Final meter reading

_____ c. Water meter removal

Existing sewer & water service on private property must be temporarily disconnected and inspected PRIOR to issuance of Demolition Permit.

_____ 8. Proof of gas disconnection from Nicor.

_____ 9. Proof of electric disconnection from ComEd.

_____ 10. Proof of 10-day notice to IEPA (*Commercial Buildings only*)

Call Community Development at 630-530-3030. 24 hours before demo to schedule a dust control inspection. Failure to schedule this inspection may result in citations being issued.

Owner/Contractor Signature: _____ Phone: _____

Demolition Permit
Community Development Department

Instructions to Contractors

The CONTRACTOR will fill out an application, list all other contractors, and provide evidence of registration and bond. Also submit a $1,782.00 permit fee and $1,000 refundable deposit if needed. The City Right-of-Way inspection will be scheduled at this time.

Contact J.U.L.I.E. at 1-800-892-0123 to locate ALL utilities PRIOR to doing any construction work. J.U.L.I.E. requires advance notice of two (2) working days.

The CONTRACTOR will call the Water Billing Department at (630-530-3110) to schedule water shut-off at the b-box, a final water meter reading, and removal of the water meter. ALL outstanding water bills must be paid in full before a demolition permit can be issued.

It is the CONTRACTOR'S responsibility to contact the Illinois Environmental Protection Agency (I.E.P.A.) 10 days prior to doing any demolition work. Fax the I.E.P.A. Notification document to Community Development at 630-530-3127.

It is the CONTRACTOR'S responsibility to insure that any and all existing wells are capped and inspected before a demolition permit is issued. The CONTRACTOR shall contact the DuPage County Health Department at 630-682-7400 and notify them that a demolition is planned. The County will then verify the existence of a well. If a well **does** exist, the CONTRACTOR must have the well sealed off by a state licensed Water Well Contractor. Confirmation of the well sealing must be sent to the DuPage County Health Department. Upon receipt of confirmation, DuPage County will send verification to the City of Elmhurst.

The CONTRACTOR will schedule a sewer and water disconnect inspection with Community Development at 630-530-3030. 24-hour advance notice is required. Community Development must verify disconnects of the sanitary sewers, storm sewers and the water supply.

It is the CONTRACTOR'S responsibility to coordinate disconnection of all private utilities. Individual utility companies must verify disconnects before a demolition permit can be issued.

The entire site must be properly fenced and all parkway trees, as well as their roots, protected by fencing. A snow fence, when erected, must be inspected and approved. Call Community Development at 630-530-3030 to schedule an inspection. The CONTRACTOR will be held responsible for all necessary repair and/or tree replacement costs should professional judgment deem it necessary. Replacement costs and/or "diminution of value" will be established per guidelines listed in the "Guide for Establishing Values of Trees and Other Plants".

The CONTRACTOR will schedule an erosion control inspection with Community Development at 630-530-3030 after the installation of the silt fence. The silt fence must be installed in accordance with the approved plan.

Demolition and Replacement of Single Family Residence

When a home is purchased specifically for demolition and subsequent rebuilding of a new home, the purchaser has several options as follows:

- The house may be inventoried by the owner or tenant occupying it. The property must be appropriately maintained for the complete duration of its occupancy.
- The house may remain vacant; however, ALL utilities must remain connected. Some lights should be on a timer so it appears someone is still occupying the house. All property maintenance issues must be addressed regularly. The grass must be cut, bushes trimmed, broken windows repaired, trash picked up, etc. so as not to adversely affect adjacent property and the neighborhood.
- If utilities are disconnected, the house and property must be maintained until it is demolished. Demolition must occur **within 30 days** of the date the first utility is disconnected (water, gas, electric or sewer).

DUST CONTROL is required during demolition. A hydrant meter is required for watering and is available through Community Development. A $500 refundable deposit is required for the meter. The contractor must provide a 1-1/2" hose and nozzle for watering. Water usage will be determined and charged to the contractor upon return of the meter. Payment is due at that time. **The contractor is required to schedule a dust control inspection through Community Development at 630-530-3030. Failure to water during demolition and removal of debris will result in at $250 fine for each offense. Failure to call for a Dust Control Inspection will result in a $250 fine and a STOP WORK ORDER will be issued.**

After the home is demolished, the builder has the following three options:

1. Begin the construction of the new home immediately (i.e., the next day). The builder shall insure that he has obtained the building permit for the new home before demolition begins.

2. After the home has been demolished, the hole left by the foundation shall be graded and filled as much as possible so that a gentle depression remains which does not become an attractive nuisance or safety hazard. All debris and construction materials, as well as brush, shall be removed from the site. The site shall be entirely fenced off on all four sides by a snow fence. A snow fence may not be required at the rear or sides of the property if there is an existing permanent fence on the property line. The subject property may remain in this condition for a maximum of 30 days before construction on the new house begins. **On the 31st day, the builder/owner of the property left in this condition will be fined $100 per day until construction of the new building begins.**

3. If the builder/owner demolishes the structure and desires to leave the lot vacant for more than 30 days after demolition, a letter must be submitted stating the builder/owner will fill the hole left by the foundation and grade the entire lot smooth (existing lay of the land and existing drainage patterns must be maintained). The entire property shall be seeded and subsequently maintained. The grass lot shall be mowed regularly (kept below 8" high) to be in compliance with existing property maintenance codes.

CITY OF ELMHURST

209 NORTH YORK STREET
ELMHURST, ILLINOIS 60126-2759
(630) 530-3000
www.elmhurst.org
Community Development – 630-530-3030
Fax: 630-530-3127

This document must be signed and submitted to the City of Elmhurst - Community Development to request a Demolition Permit with NO approved building plans.

Address: _____ Date: _____

TO: City Of Elmhurst – Community Development

I agree to adhere to the City of Elmhurst Municipal Code Section 35.11 "Demolition Requirements". After the building is demolished, I will follow one of the following options:

1. Begin the construction of the new home immediately (i.e., the next day). The builder shall insure that he has obtained the building permit for the new home before demolition begins.

2. After the home has been demolished, the hole left by the foundation shall be graded and filled as much as possible so that a gentle depression remains which does not become an attractive nuisance or safety hazard. All debris and construction materials, as well as brush, shall be removed from the site. The site shall be entirely fenced off on all four sides by a snow fence. A snow fence may not be required at the rear or sides of the property if there is an existing permanent fence on the property line. The subject property may remain in this condition for a maximum of 30 days before construction on the new house begins. **On the 31st day, the builder/owner of the property left in this condition will be fined $100 per day until construction of the new building begins.**

3. If the builder/owner demolishes the structure and desires to leave the lot vacant for more than 30 days after demolition, a letter must be submitted stating the builder/owner will fill the hole left by the foundation and grade the entire lot smooth (existing lay of the land and existing drainage patterns must be maintained). The entire property shall be seeded and subsequently maintained. The grass lot shall be mowed regularly (kept below 8" high) to be in compliance with existing property maintenance codes.

Signature: _____ Phone Number: _____

Printed Name: _____

Company Name: _____

DuPage County Health Department-Environmental Health Services
111 N. County Farm Road Wheaton IL 60187-3988
630-682-7400 x 7046

Municipal Site Evaluation Application

Record Number		**Date / /**
Applicant		
Applicant Name	Contact Phone ( ) -	
Property Owner		
Property Address		
City	State	Zip Code
Owners Address if different than above		
City	State	Zip Code
Permanent Parcel Number: - - - / / / / / /		
Permit Type		
☐ Addition ☐ Demolition		
Addition includes the following		
Number of bedrooms added		
Plans This application must be accompanied by scale drawing showing (where applicable) existing structures, proposed addition, and existing location of well and/or septic system on the property.		
Fee The permit fee is determined by project. Refer to the EHS fee schedule for current permit fees.		
☐ Type 1 Garage, sheds, decks, pools, in ground sprinkler systems, patios, driveways, demolitions		
☐ Type 2 Building additions, renovations resulting in bedrooms		
Approved By		**Date / /**
Health Department has no objection to the issuance of a permit for this work. This approval is void if substantive changes are made to the plans as submitted.		
Not Approved By		**Date / /**
Review of proposed plans for the above property revealed problems in relation to the private well or sewage disposal system on this property. Therefore, the Health Department objects to the issuance of a permit for this work. (See Attached letter)		
Re-evaluated and Approved By:		**Date / /**
Conditions outlined in non-approval letter have been addressed and corrected. Revised plans are acceptable to this Department.		
Sanitarian Comments		
PPN:	**ID:**	**Date:**

Chapter 35 - BUILDING MOVING AND DEMOLITION

Sections:

35.01 - Permit required.
35.02 - Bond—Deposits—Insurance.
35.03 - Permits.
35.04 - Safeguarding moving of buildings.
35.05 - Safeguarding demolition of buildings.
35.06 - Size of moved buildings.
35.07 - Code compliance.
35.08 - Security deposit for improvements of building.
35.09 - Inspections—Refund of improvement deposit.
35.10 - Certificate of occupancy.
35.11 - Demolition requirements.
35.12 - Penalty.

35.01 - Permit required.

No person, except a house moving contractor or demolition contractor, shall move or demolish, as the case might be, any building within the limits of the City. Every such person shall first obtain a registration certificate from the Building Commissioner as required by and set out in Article VII of Chapter 31.

(Ord. 11-2006 § 1)

35.02 - Bond—Deposits—Insurance.

A permittee under this Chapter shall file with the Building Commissioner a bond in the penal sum of ten thousand dollars ($10,000.00) with sureties to be approved by the Building Commissioner, to indemnify, keep and save harmless the City and its officials from and against any loss, cost, damage, expense, judgment or liability the City may suffer, or which may accrue against, be charged or be recovered from the City, or any of its officials from or by reason or on account of accidents to persons or property during any such demolition operations or moving operations and from or by reason or on account of anything done under or by virtue of any permit granted for any such demolition operations or any such moving operation. Such bond in each case shall extend over the period of, and shall cover all such wrecking or moving operation.

In addition to such bond, a cash deposit in the sum of five hundred dollars ($500.00) for building demolition and five thousand dollars ($5,000.00) for building moving shall be paid to the City Treasurer to insure the safety of the City streets, parkways, sidewalks, or other City properties and their complete restoration in event of damages thereto.

No permit for the moving or demolition of any building or structure shall be issued until the contractor has submitted, and the City Attorney has approved evidence of insurance coverage as required herein. Such insurance shall provide commercial general liability coverage including premises-operations liability, independent contractor's protective liability, products and completed operations liability, broad form property damage endorsement, blanket contractual liability and personal and advertising injury liability. The limits of coverage shall be in the following minimum amounts: one million dollars ($1,000,000.00) each occurrence as respects bodily injury liability or property damage liability, or both combined; one million dollars ($1,000,000.00) general aggregate; one million dollars ($1,000,000.00) products/completed operations aggregate; one million dollars ($1,000,000.00) personal and advertising injury. Such insurance shall be issued by companies licensed to do business in the State of Illinois and shall have A.M. Best & Co. ratings acceptable to the City Attorney.

The owner of any building or the house moving contractor shall not suffer the same to be or remain in any of the streets or alleys or upon the public grounds of the City for any time longer than specified in the permit.

(Ord. 11-2006 § 2)

35.03 - Permits.

(a) No person shall move or demolish any building or structure without a permit therefor as provided in Chapter 24. No permit shall be issued unless:

(1) A building permit for a replacement building or structure is issued simultaneously; or

(2) Security to guarantee compliance with Section 35.11 of this Chapter is posted.

(b) Such security, consisting of either a cash bond or letter of credit (in a form and issued by a financial institution acceptable to the City Attorney) shall be in the amount of ten thousand dollars ($10,000.00). In the case of house moving, the permit shall state specifically thereon the route to be taken and no variation from such route shall be permitted except in cases of extreme emergency.

(Ord. 13-2001 § 3)

35.04 - Safeguarding moving of buildings.

(a) No building in the process of being moved shall be allowed to stand in any street for more than four hours at any time, except in cases of accident to equipment or property which, in the judgment of the Building Commissioner, will necessitate repair or correction before the operation can safely proceed, or because of unavoidable delay due to outside causes, certified to by the Chief of Police.

(b) Lights or flares shall be so displayed at night as to warn passersby and motorists of all danger areas about the building being moved.

(Ord. 11-2006 § 4 (part))

35.05 - Safeguarding demolition of buildings.

Any person in the process of demolishing buildings shall be responsible for the proper placing of warning signs, lights or other signals to denote all danger spots in and about the building being wrecked. He shall make certain that the foundation remaining after completion of the demolition is filled in and leveled so as to remove all hazards. When the area is to be

again used for the construction of new buildings, all debris and materials resulting from the demolition shall be removed and the premises left in clean condition.

35.06 - Size of moved buildings.

It shall be unlawful for any person to move onto or along any street, alley, or public way in the City any building or structure or thing that is of such a size:

(a) That it requires the removal or movement of any part of the municipal utility system.

(b) That it requires the removal or movement of a structure supporting a private utility system unless approved by the private utility.

(c) That it requires the removal or movement of a mature tree. In the case of an approved removal of a tree that is not mature, it shall be replaced by a tree of the same kind, size, and age.

(d) That it requires the trimming of a mature tree that cannot be moved under the provisions of subsection (c) above in such a manner to create possible damage to the tree, affect the balance of the tree or reduce the value of the tree.

(e) That it may damage or otherwise affect private properties, streets, parkways, or other properties of the City of Elmhurst.

In the case of moving a building across private property, the written permission of the owner of said property shall be obtained and submitted to the City of Elmhurst at the time of permit application.

The applicant for a permit to move shall be responsible for submitting to the City a schedule giving details pertaining to the above including route, effect to various City property and restoration or any damage to same.

(7/16/73)

35.07 - Code compliance.

(a) No building shall be moved to a new location within the City unless full compliance will be ensured with all provisions of the Elmhurst Municipal Code including the zoning code. The applicant shall submit to the City a statement from an architect licensed by the State of Illinois that he has inspected the structure proposed to be moved and that it complies in all respects with applicable codes or, if such structure does not comply with any such codes, a statement including a detailed list of necessary changes required to bring it into compliance with an estimate of the cost to do same.

(b) Prior to any move of structure:

(1) A complete foundation meeting the requirements of the building code shall be in place; or

(2) The permittee shall, in its application for a permit, include plans and specifications for the construction of a foundation to be completed within ten (10) days after the moving of the structure. Said application shall include an undertaking for the posting for a security guard at all times prior to the placing of this structure on the foundation. Any failure to comply with this provision of this Section shall be grounds for denial of the issuance of an occupancy permit.

(c)

Prior to occupancy of a structure in its new location, the same shall be required to meet all applicable requirements of current codes including, without limitation, mechanical, electrical, plumbing, live loads, fire safety (five-eighths inch gypsum board throughout) requirements and installation of a hard-wired smoke detector system.

(Ord. 11-2006 § 3)

35.08 - Security deposit for improvements of building.

Before issuing a permit for the moving of any building to a location within the City, the Building Commissioner shall determine the estimated cost of such improvements as shall be necessary to bring such building, in its proposed location into conformity with the minimum building requirements therefor under the provisions of the building code and ordinances of the City. The property owner of the site to which it is proposed to move such building shall, before the moving permit is issued, deposit with the City, cash in the amount of such estimated cost, to secure the completion of such improvements. Such deposit shall in no case be less than two thousand five hundred dollars ($2,500.00).

(7/16/73; Ord. 11-2006 § 4 (part))

35.09 - Inspections—Refund of improvement deposit.

During the course of the moving and the making of the required improvements with respect to any building so moved to a new site, the Building Commissioner shall cause periodic inspections as in the case of new construction. Refunds of the cash improvement deposit shall be made by the City in proportion to the value of the work completed on the improvements from time to time, as certified by the Building Commissioner. No such refund shall be made for less than one-fifth of the original amount of such deposit. One thousand five hundred dollars ($1,500.00) of the cash improvement deposit shall not be refunded until a certificate of occupancy has been issued by the Building Commissioner.

(7/16/73; Ord. 11-2006 § 4 (part))

35.10 - Certificate of occupancy.

Before any building so moved to a new site may be occupied, a certificate of occupancy shall be procured from the Building Commissioner.

(Ord. 11-2006 § 4 (part))

35.11 - Demolition requirements.

In addition to other requirements in connection with building demolition elsewhere in the Elmhurst Municipal Code, the owner of property on which the demolition of a building or structure has occurred shall comply with the following requirements:

1. Commence construction of a replacement building or structure on such property within three days after demolition; or
2. Fill and grade the property to the extent that no hazard or attractive nuisance exists; remove all debris, construction materials and brush from the property; install an orange snow fence on the perimeter of the former site of the building or

structure; and commence construction of a replacement building or structure within thirty (30) days after demolition has been completed; or

3. Fill and grade the property to an extent which is consistent with the grade of the property prior to demolition and pre-existing drainage patterns, as approved by the City Engineer, and sow the property with grass seed or other groundcover/landscaping so as to prevent erosion of the soil within thirty (30) days after demolition has been completed;

4. Dust and airborne particle control shall be accomplished by watering down the structure being demolished and the site thereof during demolition and during removal of debris, weather permitting, to that extent necessary to reasonably control dust and other airborne particles. Such dust and airborne particle control shall be carried out by the use of one and one-half inches diameter hose connected to a hydrant water meter. The contractor shall supply such hose. Hydrant meters shall be made available from the Department of Public Works. A refundable deposit of five hundred dollars ($500.00) shall be required for use of a hydrant meter; such deposit shall not be refunded unless the meter is returned in good condition and payment in full for the amount of water used is made. The contractor shall contact the Building Department to schedule an inspection during demolition to ensure proper dust and airborne particle control is being performed. The contractor shall be required to give forty-eight (48) hours' notice of such demolition to the Building Department.

(Ord. 13-2001 § 4, (part); Ord. 19-2005 § 1)

35.12 - Penalty.

(a) Any person who violates Sections 35.11(1) through (3) shall be guilty of a petty offense and shall be fined not less than one hundred dollars ($100.00) nor more than one thousand dollars ($1,000.00).

(b) Any person who violates Section 35.11(4) shall be guilty of a petty offense and shall be fined two hundred fifty dollars ($250.00).

(c) Each day on which such violation continues shall constitute a separate offense.

(Ord. 19-2005 § 2)

Demolition Permit
Community Development Department

Instructions to Contractors

The CONTRACTOR will fill out an application, list all other contractors, and provide evidence of registration and bond. Also submit a $1,782.00 permit fee and $1,000 refundable deposit if needed. The City Right-of-Way inspection will be scheduled at this time.

Contact J.U.L.I.E. at 1-800-892-0123 to locate ALL utilities PRIOR to doing any construction work. J.U.L.I.E. requires advance notice of two (2) working days.

The CONTRACTOR will call the Water Billing Department at (630-530-3110) to schedule water shut-off at the b-box, a final water meter reading, and removal of the water meter. ALL outstanding water bills must be paid in full before a demolition permit can be issued.

It is the CONTRACTOR'S responsibility to contact the Illinois Environmental Protection Agency (I.E.P.A.) 10 days prior to doing any demolition work. Fax the I.E.P.A. Notification document to Community Development at 630-530-3127.

It is the CONTRACTOR'S responsibility to insure that any and all existing wells are capped and inspected before a demolition permit is issued. The CONTRACTOR shall contact the DuPage County Health Department at 630-682-7400 and notify them that a demolition is planned. The County will then verify the existence of a well. If a well **does** exist, the CONTRACTOR must have the well sealed off by a state licensed Water Well Contractor. Confirmation of the well sealing must be sent to the DuPage County Health Department. Upon receipt of confirmation, DuPage County will send verification to the City of Elmhurst.

The CONTRACTOR will schedule a sewer and water disconnect inspection with Community Development at 630-530-3030. 24-hour advance notice is required. Community Development must verify disconnects of the sanitary sewers, storm sewers and the water supply.

It is the CONTRACTOR'S responsibility to coordinate disconnection of all private utilities. Individual utility companies must verify disconnects before a demolition permit can be issued.

The entire site must be properly fenced and all parkway trees, as well as their roots, protected by fencing. A snow fence, when erected, must be inspected and approved. Call Community Development at 630-530-3030 to schedule an inspection. The CONTRACTOR will be held responsible for all necessary repair and/or tree replacement costs should professional judgment deem it necessary. Replacement costs and/or "diminution of value" will be established per guidelines listed in the "Guide for Establishing Values of Trees and Other Plants".

The CONTRACTOR will schedule an erosion control inspection with Community Development at 630-530-3030 after the installation of the silt fence. The silt fence must be installed in accordance with the approved plan.

TREE AND PARKWAY PROTECTION

The general contractor must properly install tree and parkway protection. The purpose of this fence is to protect the trees and root systems from damage, either by vehicles or material storage. If you are unsure of how and where to install the fencing, call Community at 630-530-3030 and request an on-site meeting with an inspector. After installation, remember to schedule another inspection with the same department.

INSTALLATION INSTRUCTIONS

Install tree protection by constructing a fence as directed. Utilize steel fence post material at 6'-0" O.C. Provide a continuous wood horizontal top rail screwed to the metal posts. Neatly stretch and secure orange plastic snow fence material to the top rail and vertical members (a chain link fence is not permitted).

This protective fence shall remain intact throughout the entire duration of the construction project. It is the sole responsibility of the general contractor to maintain the fence during the entire length of the project. Near the completion of the project and prior to removing the fence, call Community Development at 630-530-3030 to request an inspection of the parkway and permission to remove the fence. Call for this inspection before final landscaping begins.

CITY RIGHT-OF-WAY SHALL NOT BE USED FOR STORAGE OF ANY TYPE AT ANY TIME

Snow Fence Requirements

Construction Site:

- Heavy Duty Metal Stakes @ 6'-0" O.C. Max
- Continuous 2" x 4" Wood Top Rail
- 2" x 4" to be screwed to the heavy duty stakes
- Fencing to be sandwiched between 2" x 4" top rail and 1" x lumber secured with screws (plastic zip ties are not acceptable).

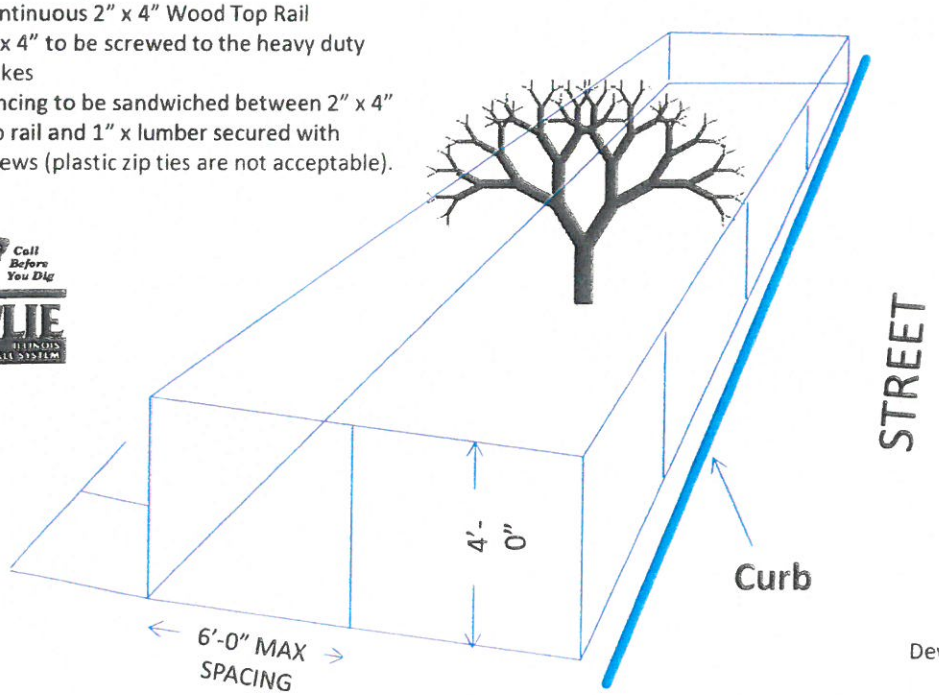

**Corner Lots - Please contact Community Development Department for specifications on fence

(TYP) Erosion Control Fence
(Silt Fence)

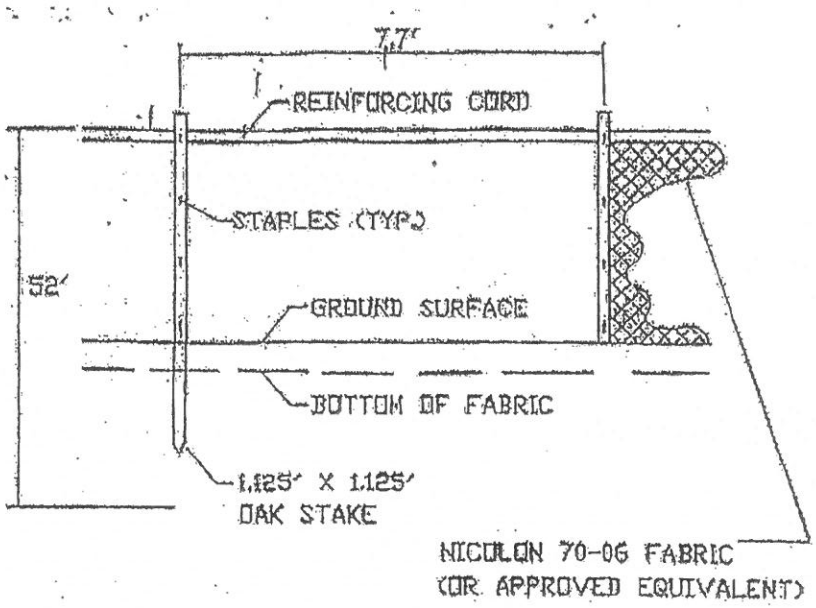

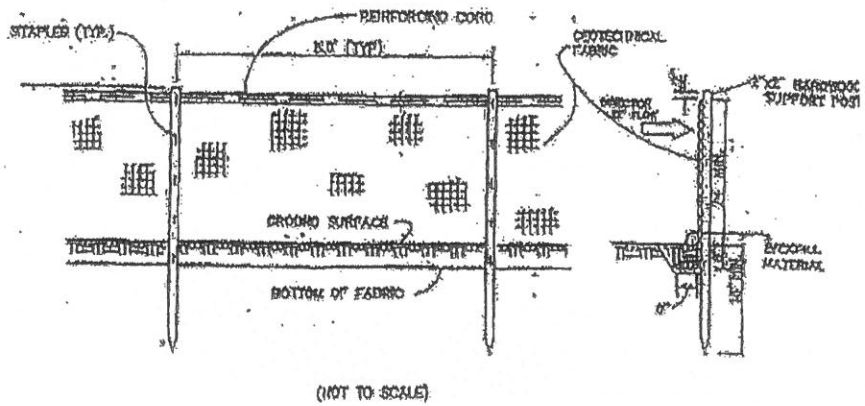

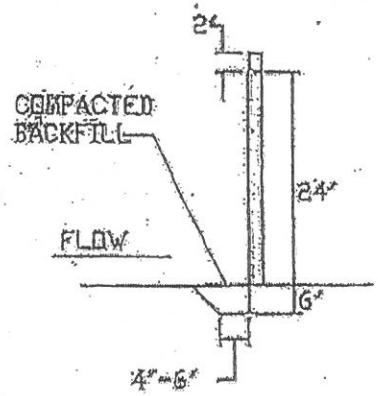

SILT FENCE DETAIL